Lab Activity Week 9 – Radiation Sensors

Take pictures of your oscilloscope output and include those images in your lab submission. Turn in any work by uploading to your GitHub repository.

In this lab you will go from a bare light sensor that produces a signal too small to see, to a complete radiation detector circuit. Along the way you will encounter the same concepts from the last two weeks – diodes, amplification, power supplies, and filtering – all working together.

1. The problem: a signal too small to see

Last week you worked with a photo-diode and saw that it produces a measurable current when light hits it. The PIN diode on your bench today (BPW34) is a similar device, but it is designed for detecting very fast, faint flashes of light – the kind produced when radiation deposits energy in a crystal. The problem is that these signals are tiny. Let's see just how tiny.

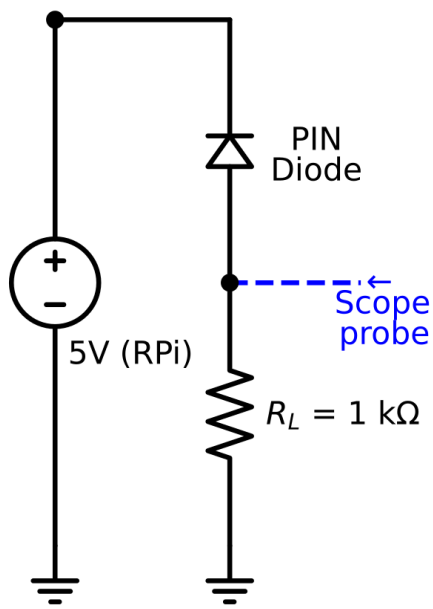

Figure 1: PIN diode with load resistor, the scope probe measures the voltage across R_L.

1. Set up your breadboard with the RPi providing 5V as you have done in previous labs.
2. Place the PIN diode on the breadboard in reverse bias, the same way you oriented the photo-diode last week. Use a **1 kΩ resistor** as the load resistor, connecting it between the diode and ground.
3. Turn on the oscilloscope. Connect the oscilloscope probe across the load resistor (probe tip to the side connected to the diode, ground clip to the ground side).

4. Try shining your phone flashlight at the PIN diode. Can you see any change in the voltage on the oscilloscope?

Yes, the voltage spikes by 20-130 mV depending on how close the flashlight is to the diode. If we zoom out on time scale and rapidly turn the flashlight on and off it looks like a fairly good square wave!

5. If you can see a signal at all, how large is it? Record the approximate voltage.

The pulse gets shifted up by half a division, which corresponds to 25 mV. Sometimes it spikes to higher values, with a peak recorded at 130 mV.

6. If you didn't see anything, try replacing the resistor with a 1 MΩ resistor. Do you see a signal now?

Signal difference was seen with 1kΩ so no need to switch.

Think about it: The BPW34 datasheet says this diode produces about 75 μA of photocurrent at 1000 lux (bright indoor light). With your 1 kΩ load resistor, what voltage would that produce across R_L? (Use Ohm's law: V = I × R.) What about when you tried the 1 MΩ load resistor instead?

With 1 kΩ:

V=75x10^-6*1000Ω= 0.075 V

With 1 MΩ:

V=75x10^-6*1000000Ω= 75 V

For detecting radiation, the flashes of light we need to measure are much fainter than a phone flashlight, and they happen in millionths of a second. Even with amplification, this signal will be challenging. We need a smarter approach.

2. Amplifying the signal with an op-amp

An op-amp (operational amplifier) is a chip that takes a very small input signal and produces a much larger output signal. The particular way we are going to use the op-amp is called a **transimpedance amplifier (TIA)** – it converts a small current (like the one from our diode) directly into a voltage. The word "transimpedance" just means converting current to voltage, since impedance (measured in Ohms) is the ratio of voltage to current.

The key component is the **feedback resistor** – a resistor connected between the output and the inverting input of the op-amp. The output voltage is: Vout = I × Rf. A larger feedback resistor means more amplification. With a 1 MΩ feedback resistor, every microamp of current from the diode becomes 1 volt of output signal.

We are going to build this circuit in stages, and along the way you will discover an important limitation of op-amps.

2a. First attempt: single 5V supply

The LM358 op-amp on your bench can be powered from a single 5V supply. But there's a catch: the output of a single-supply op-amp can only swing between 0V and about 3.5V (its positive rail minus some headroom). In our transimpedance configuration, the photocurrent wants to pull the output *below* the reference voltage. If the reference is at 0V (ground), the output would need to go negative – but it can't. To fix this, we set the reference point at **mid-supply (2.5V)** using a voltage divider, so the output has room to swing downward.

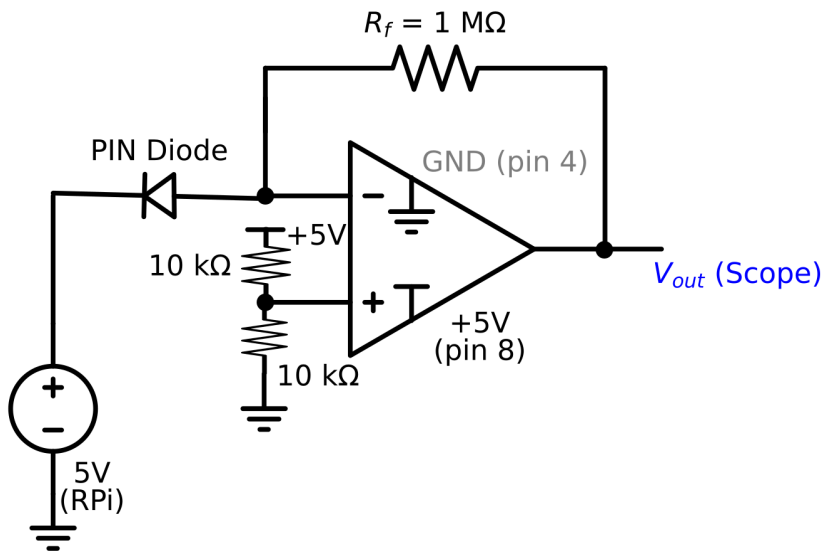

Figure 2: Transimpedance amplifier with single 5V supply. The voltage divider on the + input creates a 2.5V reference. The output rests at 2.5V and swings down when photocurrent flows.

1. Take the LM358 op-amp chip (A diagram of the op-amp pins is included at the end of this lab) and place it across the center gap on the breadboard so that the pins straddle the gap. The chip has a small notch at the "top" with pin 1 on the left.
2. Connect the chip's power: pin 8 (V+ - top right) goes to the +5V rail, and pin 4 (GND) goes to the ground rail.
3. Build the mid-supply reference: connect two 10 kΩ resistors in series between the +5V rail and ground. Connect the midpoint (where the two resistors meet) to pin 3 (the non-inverting input, marked +). This sets the op-amp reference voltage to 2.5 V.
4. Connect the PIN diode so that the anode goes to pin 2 - the inverting (–) input.
5. Connect a **1 MΩ feedback resistor** between pin 1 (output) and pin 2 (inverting input).
6. Connect the oscilloscope probe to pin 1 (output) with the ground clip to the ground rail.
   6.1. If you have trouble getting a clean signal - also connect a 1 μF capacitor from this midpoint to ground – this smooths out any noise on the reference voltage (see the modified Figure 2 at the end of the lab).

7. Before shining any light on the diode (try covering it with your finger), what voltage do you see at the output? It should be near 2.5V.

It is at around 2.5 V.

8. Now shine your phone flashlight at the PIN diode. What happens to the output voltage?

The output voltage decreases by about 2.5 V when exposed to the brightest light.

> **What you should see:** The output likely drops immediately to 0V and stays there – it is **clipped**. The 1 MΩ feedback resistor converts every microamp of photocurrent into 1V of output swing. The BPW34 produces tens of microamps even in room light, which would require tens of volts of swing – far more than the 2.5V available below our reference point. The op-amp hits its lower power rail and can't go any further.

Think about it: The BPW34 produces about 75 μA at 1000 lux. With a 1 MΩ feedback resistor, how much output swing would that require? How does that compare to the 2.5V of headroom you have below mid-supply?

You have just discovered an important limitation: the op-amp's output can only swing within its power supply rails. When the required output swing exceeds what the supply allows, the signal clips. We can address this in two ways: reduce the feedback resistor (less gain) or increase the supply voltage (more headroom). Let's try increasing the supply.

2b. Expanding the supply: boost converter

You already know how to use the boost converter from last week. Here we will use it to increase the op-amp's supply voltage from 5V to 10V, giving us more room for the output to swing. The voltage divider now creates a 5V reference from the 10V supply, giving us 5V of headroom in each direction.

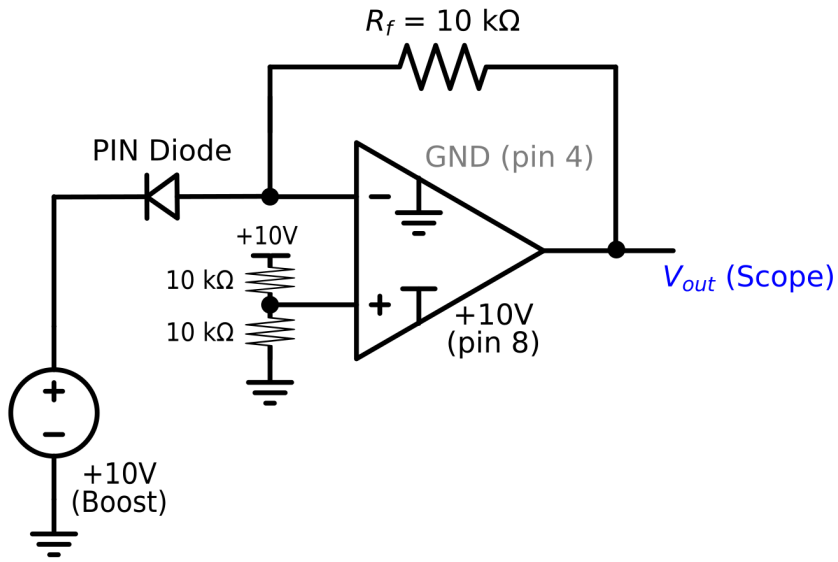

Figure 3: Transimpedance amplifier with boosted 10V supply. The voltage divider now creates a 5V reference, giving 5V of headroom below mid-supply. The feedback resistor is reduced to 10 kΩ.

1. Connect the boost converter to the 5V RPi supply. Use the voltmeter to dial the output up to approximately **10V**. Verify this voltage with the meter before connecting anything else.
2. Reconnect the op-amp power: pin 8 (V+) now goes to the **+10V boost converter output**, and pin 4 (GND) stays on the ground rail.
3. Update the voltage divider: connect two 10 kΩ resistors between the +10V output and ground (replacing the connection to the 5V rail). The midpoint is now at 5V and still connects to pin 3.

   3.1. The 1 μF bypass capacitor may become necessary now – why?

The boost converter generates high-frequency switching noise that can bleed into the op-amp and drown out our tiny radiation signal. This capacitor across the power supply provides a path to ground to filter out that noise.

4. First, try with the **1 MΩ feedback resistor** still in place. Shine your flashlight. Does it still clip? (It likely will – even 5V of headroom is only enough for 5 μA with a 1 MΩ resistor.)

The system does still clip. The voltage swing doesn't go below 5V of change, even when we add multiple flashlights. Moving our hand closer or otherwise decreasing ambient light makes the voltage go up.

5. Now swap the feedback resistor to **10 kΩ** (the 100 kΩ resistor may work better if you are not seeing any change with 10 kΩ). With this resistor, clipping occurs at 500 μA – well above what the BPW34 produces in normal lighting.
6. Try shining your phone flashlight at the PIN diode. You should now see the output voltage change when you illuminate the diode. Try waving your hand over the diode, or covering and uncovering it.

7. Record the output voltage with the flashlight on and off. Calculate the photocurrent using I = (Vref – Vout) / Rf, where Vref is your mid-supply voltage (≈5V).

Flashlight off

Vout= 3V

I = (5-3)V/10kΩ=0.0002 A

Flashlight on

Vout= 0V

I = (5-0)V/10kΩ=0.0005 A

> **NOTE:** Make sure your connections are secure. A loose wire in this circuit can produce large amounts of noise that will overwhelm the signal.

Think about it: You have now seen the same signal problem solved two different ways. In Part 1, you used a load resistor, and V = I × R gave the same conversion factor as the TIA. Why is the op-amp circuit better? (Hint: think about what the op-amp does to the voltage across the diode – the op-amp holds the reference voltage at a fixed value, which keeps the diode at a constant bias point regardless of the signal current. This is not true if we just use a load resistor.)

> **Optional:** If you have time, try building the transimpedance amplifier circuit in the online simulation tool (Ultimate Electronics). Set up the op-amp with the voltage divider and feedback resistor, and use a current source in place of the diode. Vary the current and observe how the output voltage changes. This can help you build intuition before debugging the physical circuit.

3. A real radiation detector: CsI scintillation detector

The small silver box with pins on your bench is a CsI (cesium iodide) scintillation detector. Inside the metal housing is a CsI crystal and an SiPM (silicon photomultiplier). When a gamma ray enters the crystal, it produces a flash of light. The SiPM detect that light and convert it into an electrical pulse.

Unlike the bare PIN diode you just worked with, SiPMs have a huge amount of internal gain – each incoming photon triggers an avalanche of charge carriers, producing a signal large enough to see on the oscilloscope without any additional amplifier. This is a different engineering solution to the same “tiny signal” problem: instead of amplifying the signal externally with an op-amp, the amplification is built into the sensor itself.

The detector needs a bias voltage of about 29V applied to its cathode pin. This is similar to the reverse bias you applied to the photo-diode, just at a higher voltage. The signal comes out of the anode pin.

Instructor demonstration: Before you build your own circuit, we will see a demonstration of the detector connected to a clean 29V power supply. Watch the oscilloscope and take note of what the radiation pulses look like – their shape, size, and how often they appear with a radioactive source nearby. Notice the pulse shape: a fast

rise followed by an exponential decay. This is an **analog signal** – the voltage varies continuously.

4. Building the detector circuit

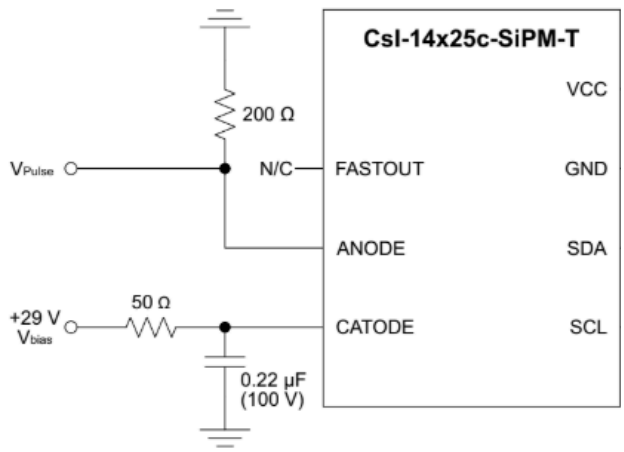

Figure 4: Diagram for the CsI detector circuit.

Now you will build the bias circuit yourself using the RPi and boost converter.

1. Set up your breadboard with the RPi providing 5V.
2. Connect the boost converter to the 5V supply. Use the voltmeter to dial the output up to approximately **29V**. Verify this voltage with the meter before connecting anything else.

> **CAUTION:** Be careful with 29V. While this is not dangerous to you, it is enough to damage components if connected incorrectly. Double-check your wiring before powering on.

3. The detector diagram (Figure 4) shows the pins you will need. You will use two connections: CATHODE (bias voltage) and ANODE (signal output).
4. Connect the boost converter output (+29V) to the CATHODE pin. Place a 0.22 µF capacitor (please pay attention to the capacitor orientation – it matters!) between the cathode connection and ground – this is a filtering capacitor to smooth out noise from the boost converter. Place a small resistor (around 50 Ω), in series between the boost converter output and the cathode, before the capacitor. This resistor and capacitor together form an RC low-pass filter.
5. Connect a load resistor (try 200 Ω to start, you can also try up to 1 kΩ) between the ANODE pin and the GND rail.
6. Connect the oscilloscope probe across the load resistor: probe tip to the anode side, ground clip to the ground rail.

7. You will probably need to push the auto-set button. For some oscilloscopes, you will then want to change the trigger settings back to “Normal”. Adjust the trigger level (arrow at the right) so that it is above the baseline by a few ticks.

> **TIP:** You can use various controls on the oscilloscope to change the voltage step size or the time step size and trigger level (ask for specific instructions for your model).

8. Try bringing a radioactive source near the detector. You should seeing a change in the pulse rate.
9. Take a screenshot or picture of your oscilloscope output and include it here

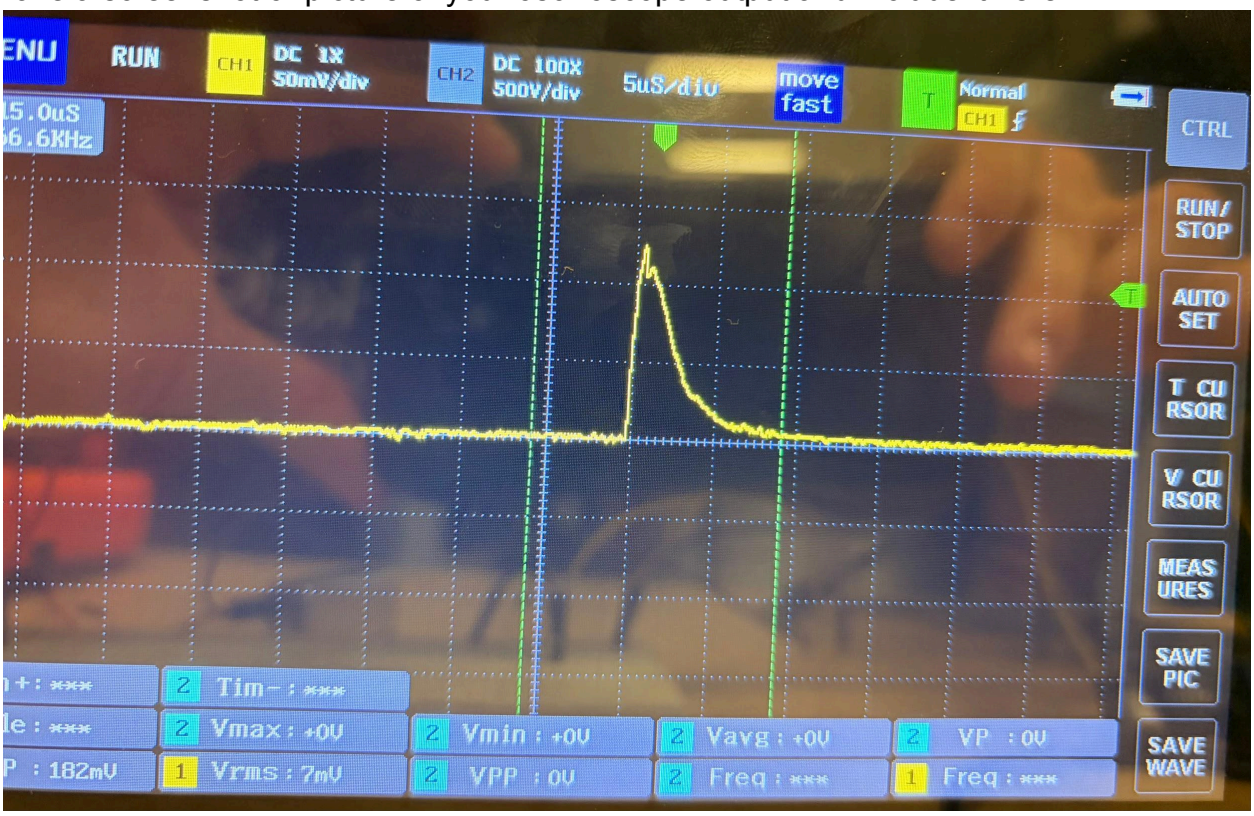

5. Comparing signals and thinking about noise

1. Compare the pulses you see on your oscilloscope to the ones from the demonstration with the clean power supply. What differences do you notice?

The baseline of the oscilloscope trace looked much fuzzier. The pulses were a bit harder to distinguish from the background fuzz.

2. You will likely see more noise – random fluctuations – on your signal compared to the clean supply. Where is this noise coming from?

The noise is largely coming from the boost converter, which oscillates voltage slightly. There is also some coming from the raspberry pi voltage output to begin with. No voltages we work with can be truly constant DC voltage, there will always be some random noise.

3. The RC filter on the bias line (the resistor and capacitor you placed between the boost converter and the cathode) is trying to block the high-frequency switching noise from the boost converter while letting the steady 29V through.
4. What could you change about the filter to block more noise? What tradeoff might that involve?

THe RC filter sets a cutoff frequency. To block more of the low-frequency noise, we would need to lower the cutoff frequency by increasing the RC time constant. If we increase this too much, the circuit will take longer to power up and stabilize. If we increase the series resistor, the dark current flowing through the detector will cause a permanent voltage drop across that resistor.

5. Try changing the load resistor value (for example, switch from 200 Ω to 1 kΩ). How does this change the pulse shape? What about the noise level?

The pulse is wider because it takes longer for the RC circuit to charge/discharge. Noise level is much lower as a result.

6. Comment on the pulses you are seeing. Are they what you expected? Think about what is happening physically: a gamma ray hits the crystal, light is produced, the SiPM converts it to current, and that current flows through your load resistor.

The pulses look somewhat Gaussian, which makes sense. There is some finite rise time for all the current to flow in a pulse and some fall time for the current to fall back to zero, so averaged out the pulse looks like a Gaussian peak.

7. Look at the pulse heights. Are all the pulses the same height, or do they vary? If you wanted to build an energy spectrum from these pulses, you would need to digitize each pulse height. Think about what ADC parameters (sampling rate, number of bits) would matter most for accurately recording the pulse heights.

The pulse height varied as the gamma rays can deposit different amounts of energy into the CsI crystal.

6. Connecting the concepts

Take a moment to reflect on what you have done over the last three weeks:

In **Week 7**, you simulated RC circuits and saw how a low-pass filter smooths out high-frequency signals. You built your first real circuit on a breadboard and measured a time constant with a resistor and capacitor.

In **Week 8**, you learned about diodes – LEDs that produce light from current, and photo-diodes that produce current from light. You used a boost converter to increase voltage and thought about the noise it introduces.

Today, you put it all together. You saw firsthand how op-amp power supply rails limit the output swing, used a boost converter to expand that range, amplified a tiny diode signal with a transimpedance amplifier, powered a scintillation detector with a boosted voltage supply, used an RC filter to manage noise, and observed real radiation detection pulses on an oscilloscope.

Every one of these building blocks, voltage regulation, filtering, signal amplification, signal readout, is present in professional radiation detection systems. The versions used in research labs are more sophisticated, but the core principles are exactly what you have been working with.

Additional references:

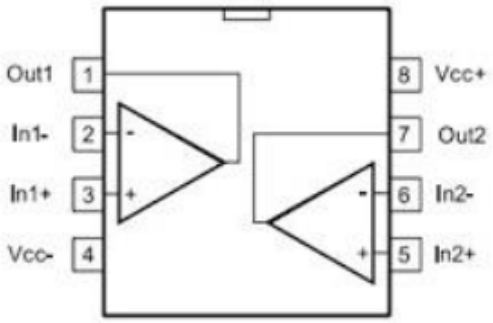

Figure 2a: Op-amp pin-out diagram. You will only need pins 1-4 and pin 8.

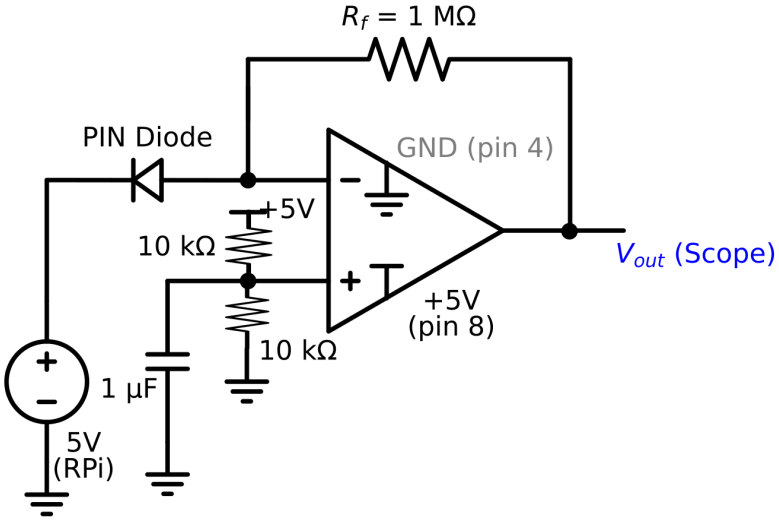

Modified Figure 2: Transimpedance amplifier with single 5V supply. The voltage divider on the + input creates a 2.5V reference. The output rests at 2.5V and swings down when photocurrent flows. Includes a 1uF capacitor for noise reduction.